F2/10T-66EM

60 MAGICLOTUS
ELECRTIC FRYERS - TOP

Fryer singlephase - Tank capacity 10+10 Lst. cm. 22x35x23h - Sieve and lid for pan - N. 2 baskets cm. 20x30x10h Production 16 kg/hr

Construction - Fabricated using CrNi 18/10 AISI 304 grade Stainless Steel Scotch-Brite Satin polish Finish, incorporating 1mm thick worktop, rounded edges, chromed details and rear splash back. Knobs with waterproof grades IPX5. Model - Professional Electric Fryer. With single or Double tank to include both basket and lids, tank filter with basket support. Double Thermostat for operating and over heat safety. Front oil drain. Maintenance - All serviceable parts are accessible by the easy removal of front control panel. Easy tank cleaning by rotating heating element. Fittings - Appliance is supplied with adjustable feet.

ITALIAN CULINARY ART

The pictures are purely representative. The manufacturer reserves the right to modify the technical data and models without previous notice.

F2/10T-66EM

60 MAGICLOTUS
ELECRTIC FRYERS - TOP

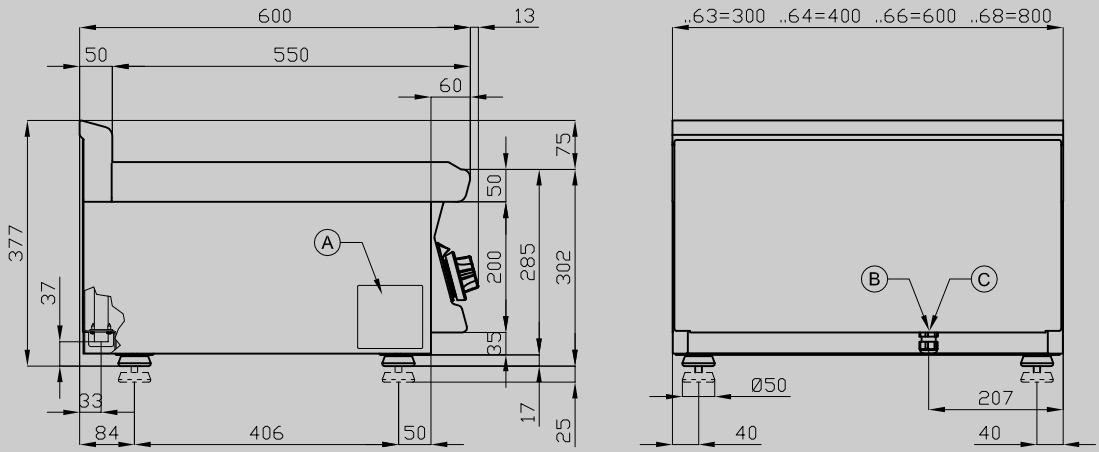

A	Data plate		B	Electrical connection	

MODEL:	F2/10T-66EM
DIMENSIONS:	cm. 60x 60x 28h
ELECTRIC POWER:	7,3 kW
VOLTAGE:	230V~
FREQUENCY:	50/60 Hz

kg:	34
m^3:	0.283
mm:	630x690x650

BUY LOTUS BUY ITALY

The pictures are purely representative. The manufacturer reserves the right to modify the technical data and models without previous notice.

LOTUS S.P.A.Via Calmaor, 46
31020 San Vendemiano(TV) - Italy
Tel. + 39 0438 778020 / 778468
Fax + 39 0438 778277
www.lotuscookers.it - lotus@lotuscookers.it